TIMBUCKTOO MFG., INC.

Genesis

Portable Heavy Duty Extractor

Owner's Manual

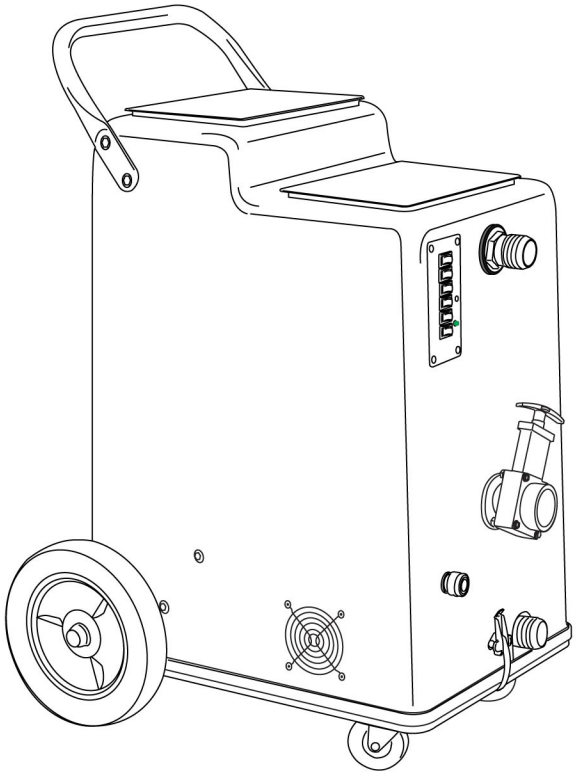

IMAGES AND ILLUSTRATIONS ARE FOR REFERENCE ONLY.
ACTUAL PRODUCTS MAY NOT BE EXACTLY AS SHOWN.

1633 WEST 134th. STREET GARDENA, CA 90249-2013
TEL: 310 323 1134 FAX: 310 323 8397
WWW.TIMBUCKTOOMFG.COM

© All rights reserved

CAUTION

GENERAL PRECAUTIONS FOR SINGLE AND DUAL POWER CORD EXTRACTORS:

Single Power Cord Extractors

Make sure the extractor is plugged into an electrical outlet with the same voltage as shown on the extractors

Dual Power Cord Extractors

Make sure the power cord is plugged into an electrical outlet with the appropriate voltage. (As shown on the extractor). Each power cord must be on separate circuits. To test if the extractor is on two separate circuits press the “Circuit Test” switch located on the switch plate. If the green light is illuminated it will confirm that the extractor is on two separate circuits. If the green light is not illuminated this indicates that the extractor is on the same circuit, and that the user must find an additional circuit to plug into.

Warning!

This extractor is designed for use on carpet, floor and upholstery applications as per instructions written in this manual. Any deviation from its proper use or purpose and the consequential damage that may occur is the sole responsibility of the end user.

Do not attempt to repair the extractor. See your authorized service dealer.

Do not expose extractor to extreme temperatures.

Do not use unauthorized replacement parts.

This extractor was tested before shipping and antifreeze may remain in the plumbing system. The user must flush out antifreeze before use. Make sure to use antifreeze if storing the extractor in extremely cold weather.

TABLE OF CONTENTS

CAUTION 2

TABLE OF CONTENTS 3
LIMITED WARRANTY 4
WARRANTY REGISTRATION 5
Owner's warranty information

SAFETY INSTRUCTIONS 7

EXTRACTOR OVERVIEW 8

ASSEMBLY 9
Connect power, Connect hose

OPERATING THE EXTRACTOR: 10
Before operating
Operating
After operating

PREVENTATIVE MAINTENANCE 12

HOW TO: 14
How to use attachment tools
How to bleed the system
System without electric instant water heater
System with electric instant water heater

OPTIONS: 16
Chemical feed & Mixing system
Adjustable chemical feed system
Metering tips preset chemical feed system
Electric instant water heater (in line heater)
Tank heater (bottom mount)

TROUBLESHOOTING: 20
Electrical system
Pump system
Vacuum system
Heating system

LIMITED WARRANTY

All equipment and accessories are thoroughly inspected and tested before leaving the factory. They are warrantied to be free of defects from workmanship and materials for one year from date of original purchase. (proof of purchase is required).

Labor: 90 days from initial purchase
Parts: 1 year, excluding normal wear and tear items
Heavy duty Fiber composite body: 20 years limited warranty
Polyethylene body: 5 years limited warranty

Should any trouble develop during this period, please contact your dealer or manufacturer to receive a Return Guarantee Authorization number (RGA #). Return the parts or extractor that need to be replaced. If after an inspection it is determined to be under warranty, the factory will repair or replace (manufacturer's discretion) the parts or equipment and return parts or equipment at no charge. Note: Credit, repair or replacement will not be given to any parts or equipment without the above mentioned RGA#.

Proof of purchase is necessary to establish the date of the original sale. Receipt of purchase or warranty registration can be used as proof of purchase. It is extremely important to register your purchase by sending Timbucktoo MFG., Inc. the warranty registration form within 10 days of purchase (Page 5).

This warranty is in lieu of all other warranties expressed or implied, and no person is authorized to give any other warranty, assume obligation or liability on the manufacturer's behalf.

This Warranty does not apply when:
- Repairs that are required because of normal wear and tear
- Repairs have been made or attempted by others
- Items have been abused, misused or improperly maintained
- Modifications or alterations have been made to the equipment

LIMITATION OF REMEDY:

In no event shall seller be liable for any incidental, consequential or special damages of any kind or nature whatsoever. Including but not limited to lost profits arising from or in anyway connected with this agreement or items sold hereunder, whether alleged to arise from breach of contract, express or implied warranty, or in tort, including without limitation, negligence, failure to warn or strict liability.

ENTIRE AGREEMENT / GOVERNING LAW:

This agreement and warranty shall be governed in all respects by the law of the State of California. No actions arriving out of the items sold hereunder or this Agreement may be brought by either party more than two (2) years after the cause of action occurs. All mediation or litigation will take place in the County of Los Angeles in California.

WARRANTY REGISTRATION

PLEASE SIGN AND MAIL WITHIN 10 DAYS FROM THE SALE DATE FOR VALID WARRANTY

PLEASE PRINT OR TYPE (SEND TO DEALER)

PURCHASED FROM (DEALER NAME): .....

ADDRESS: .....

CITY, STATE, ZIP: .....

TELEPHONE: .....

DATE OF PURCHASE: .....

SERIAL NUMBER: .....

MODEL NUMBER: .....

PLEASE PRINT OR TYPE (SEND TO TIMBUCKTOO MFG., INC.)

DEALER NAME: .....

ADDRESS: .....

CITY, STATE, ZIP: .....

DATE SOLD: .....

PURCHASER'S NAME: .....

ADDRESS: .....

TELEPHONE: .....

DATE OF PURCHASE: .....

SERIAL NUMBER: .....

MODEL NUMBER: .....

Signature: .....

Print Name: .....

OWNER'S WARRANTY INFORMATION

DATE OF PURCHASE: .....

SERIAL NUMBER: .....

MODEL NUMBER: .....

PURCHASED FROM (DEALER NAME): .....

ADDRESS: .....

CITY, STATE, ZIP: .....

TELEPHONE: .....

KEEP FOR YOU OWN RECORDS

BLANK PAGE

SAFETY INSTRUCTIONS

WARNING!
When using an electrical appliance, basic precautions should always be followed.

To reduce the risk of fire, electric shock or injury following these tips:

1. Do not leave appliance plugged in. Unplug from outlet when not in use.
2. Electric shock could occur if used outdoors or on wet surfaces.
3. Keep away from children. Extractor is not to be used as a toy.
4. Use only as described in this manual. Use only manufacturer's recommended parts.
5. Do not use extractor with damaged power cords.
6. Do not abuse the power cord. Do not pull or carry extractor with the power cord. Do not use the power cord as a handle. Do not close doors on the power cord. Do not pull power cord around sharp edges or corners. Do not run the extractor over the power cord. Do not keep power cords around heated surfaces.
7. Do not unplug by pulling on electric power cord. To unplug, grasp the plug, not the electric power cord.
8. Do not handle plug or appliance with wet hands.
9. Do not put any object into openings. Do not use with any opening blocked; keep free of dust, lint, hair and anything that may reduce air flow.
10. Keep hair, loose clothing, fingers and all parts of body away from openings and moving parts.
11. Do not pick up anything that is burning or smoking, such as cigarettes, matches or hot ashes.
12. Do not use extractors without filters.
13. Turn off all controls before unplugging from electric outlet.
14. Use extra care when cleaning on stairs.
15. Always wear safety equipment and appropriate clothing when operating the extractor.
16. Do not use extractor to pick up flammable or combustible liquids such as gasoline or use in areas where such items may be present.
17. Connect to a properly grounded electric power outlet only.
18. Do not attempt to service the extractor while appliance is plugged in.

EXTRACTOR OVERVIEW

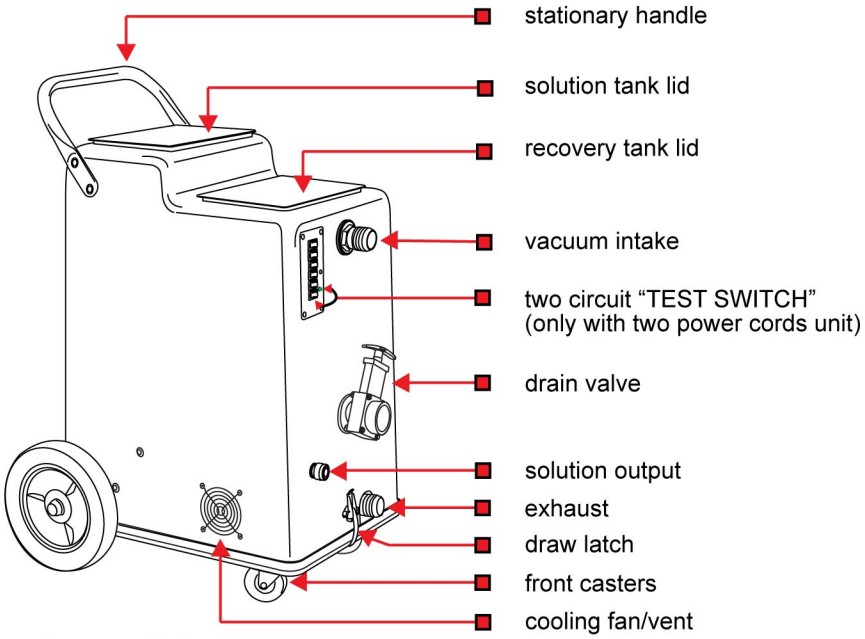

image 8.1

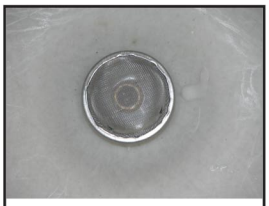

TF105110
solution filter
inside solution tank

image 8.2

PM10150
wet vacuum filter
inside recovery tank

image 8.3

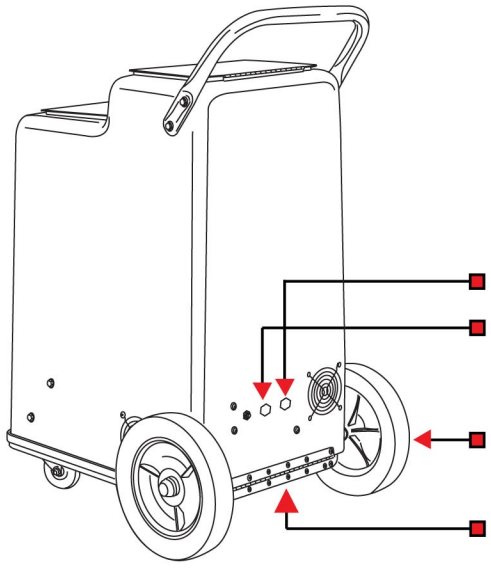

image 8.4

IMAGES AND ILLUSTRATIONS ARE FOR REFERENCE ONLY. ACTUAL PRODUCTS MAY NOT BE EXACTLY AS SHOWN.

ASSEMBLY

CONNECT ELECTRIC POWER CORD

Protect the ground plug. This plug is to be used with a proper grounding type (three prong) receptacle. Do not break off or pull out the grounding blade. (see image 9.1)

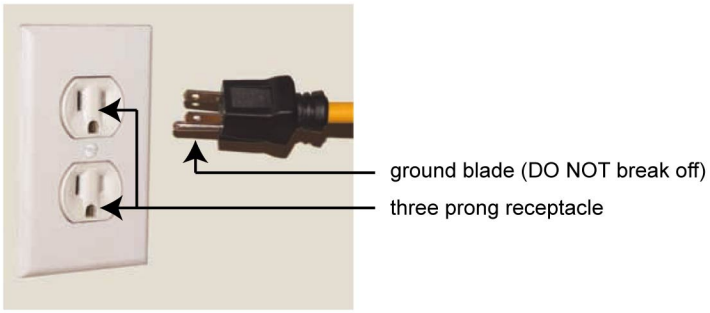

image 9.1

CONNECT HOSE

The solution hose has male quick connect on one end and has female quick connect on the other. (See below image)

- Vacuum hose connection to attachment tool
- Solution hose connection to attachment tool quick connector
- Solution hose line

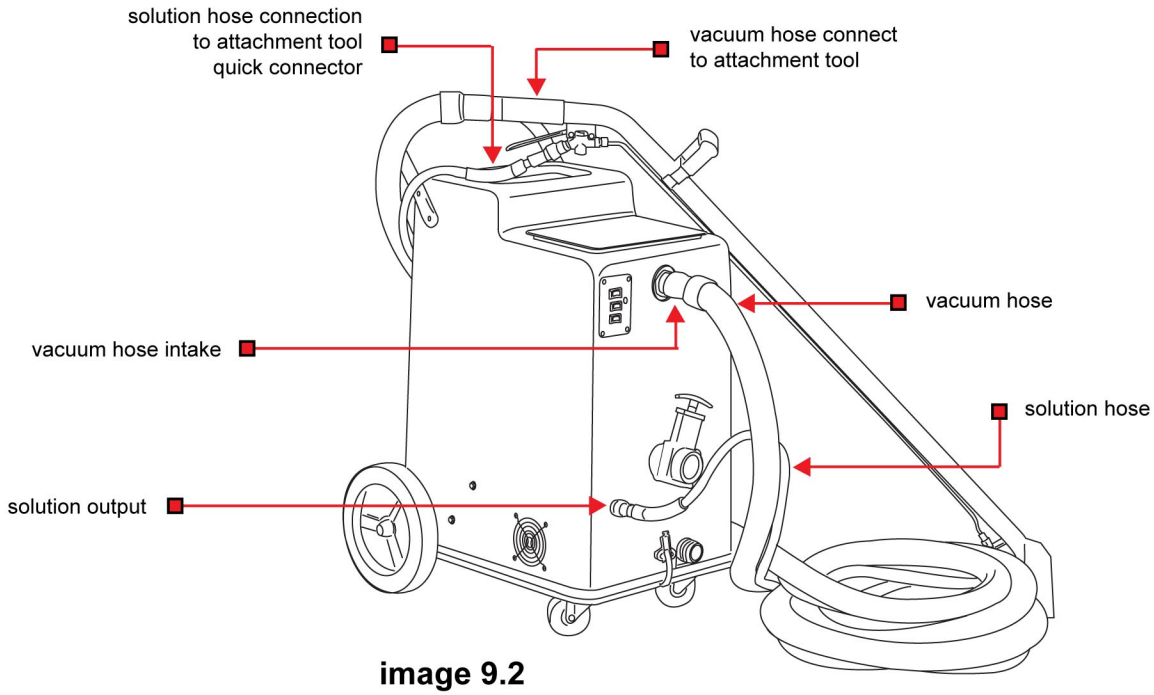

image 9.2

10

OPERATING THE EXTRACTOR

BEFORE OPERATING:

Read the manual carefully and completely before attempting to operate the extractor. Make sure the unit is plugged into an electrical outlet with the same voltage as shown on the extractor.

1. When plugging in a dual power cord extractor A (see below image 10.1); each cable should be on separate circuits. When this is accomplished a green light will turn on when the “Circuit Test Switch” is pressed on the switch plate. If the light does not turn on, this indicates that you are not on two separate circuits and are increasing your chance of a circuit blowout.

2. Always thoroughly pre-vacuum the surface to be cleaned. Using an upright vacuum cleaner (or the extractors dry vacuum with optional dry attachment).

3. Pre-spray the cleaning area with recommended cleaning solution for the best results.

4. Fill solution tank with clean water.

5. Connect both the vacuum hose and solution hose to proper locations. See image on “Assembly” page. (Image 9.2)

6. Make sure the drain valve is closed and the recovery tank lid is secured before turning on the vacuum and pump switches.

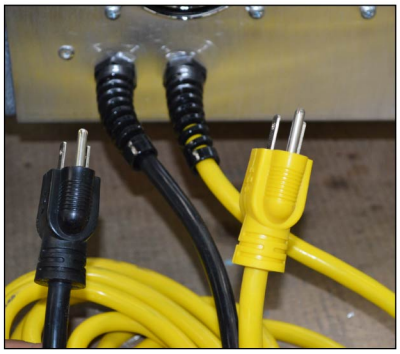

Two electric power cord extractors must have two distinct circuits.

image 10.1

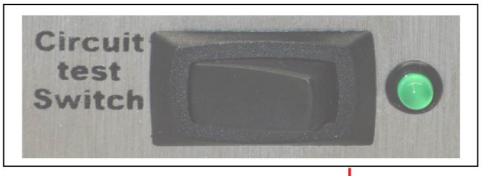

image 10.2

Enlarged view of the Circuit Test Switch

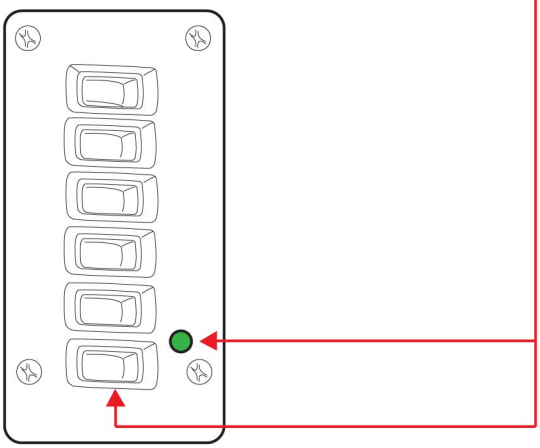

image 10.3

“Circuit test” switch next to the green light, push that switch and the green light should glow. If not it is not on two separate circuits.

OPERATING THE EXTRACTOR

OPERATING:

1. Start and continue cleaning until the clean water tank is empty and/or recovery tank is full or until cleaning job is done.
2. If foam is detected in the recovery tank and hose, use a defoamer to prevent damage to the vacuum motors.

AFTER OPERATING:

1. Turn off all the switches and disconnect electric power cord from power plug, then empty the recovery tank into a bucket or another proper drain area. (see below image 11.1)

2. Remove remaining water from clean water tank, disconnect the vacuum hose from wand and insert the vacuum hose into clean water tank. Vacuum out all the excess water. (see below image 11.2.)

3. Drain and thoroughly clean the recovery tank. At this point the tank can be rinsed while dumping.

4. The vacuum filter (wet filter) and ball float cage have to be rinsed and cleaned thoroughly when it's still wet. (see below image 11.3.) See "Preventative Maintenance" page. Wrap power cords around handle for storage. Do not use solution or recovery tanks for storage, extractor can be damaged.

Consult your sales representative for more information on cleaning methods.

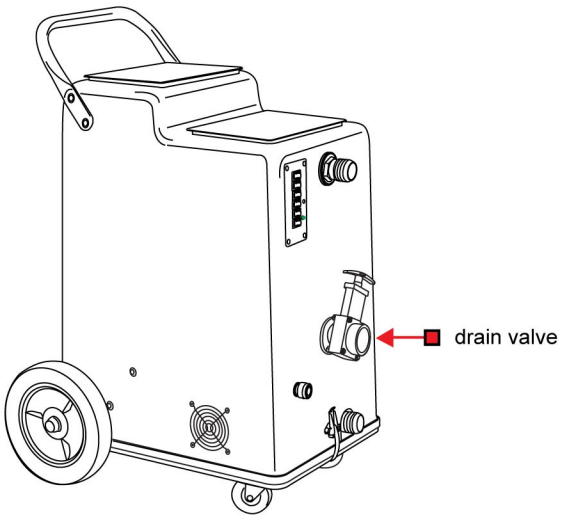

image 11.1

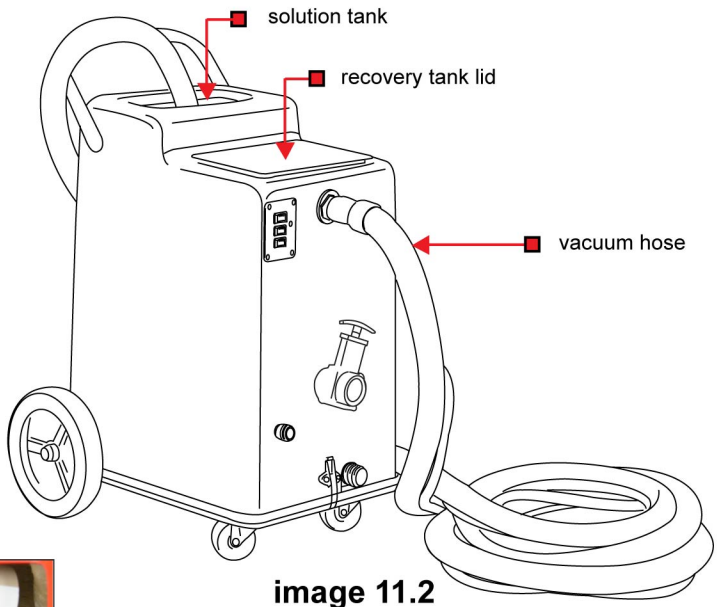

image 11.2

PM10150 vacuum filter and ball float cage in recovery tank

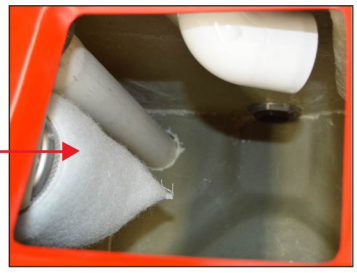

image 11.3

IMAGES AND ILLUSTRATIONS ARE FOR REFERENCE ONLY. ACTUAL PRODUCTS MAY NOT BE EXACTLY AS SHOWN.

PREVENTATIVE MAINTENANCE

AFTER EACH USE: CLEAN, LUBRICATE, ETC...

1.Thoroughly clean all equipment and accessories after each use.
   a. Rinse solution tank, recovery tank, and hoses with clean water.
   b. Flush entire solution system with clean water. This includes all solution hoses and attachment tool. Do not allow liquid with cleaning chemicals to remain in the equipment.
   c. Clean all filters (see below images: solution tank filter, solution line filter, vacuum filter. Optional: dump pump and dump pump filter)

2. Lubricate all quick connects as needed.

3. Do not use the same container to fill the solution tank that is used to empty the waste tank. This would result in putting dirt and debris into the solution lines that will block filters, orifices, and generally degrade the systems.

4. Keep equipment out of extreme temperatures. (i.e. Freezing temperatures will make water expand, and will damage pump, fittings, valves, etc.)

5. Turn off the extractor whenever not in use. Do not walk away from an extractor, while unattended the extractor can cause excessive pressure that is not good for it.

6. Check for loose or frayed wires.

image 12.1

Solution tank filter located in solution tank (all standard models)

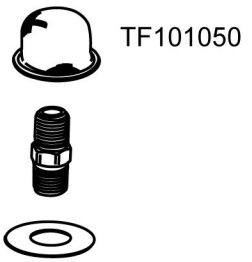

image 12.2

Solution line filter (500 psi or higher)

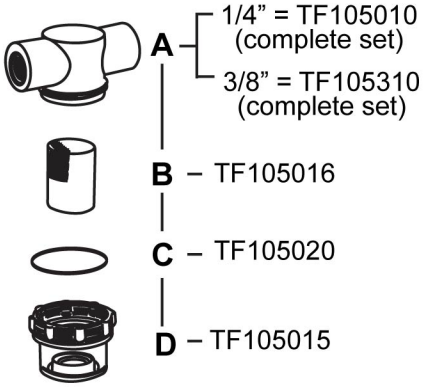

image 12.3

Auto Dump pump and filter (optional)

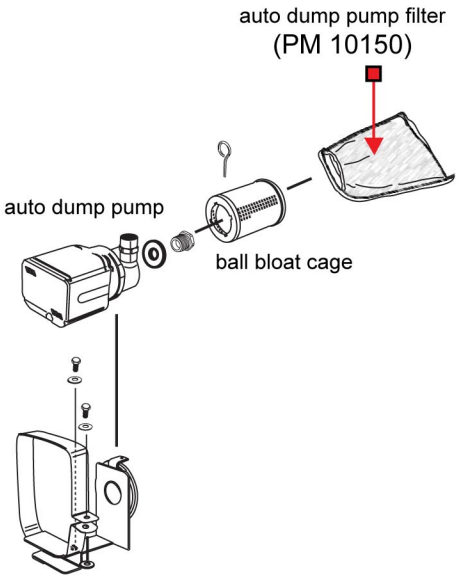

IMAGES AND ILLUSTRATIONS ARE FOR REFERENCE ONLY. ACTUAL PRODUCTS MAY NOT BE EXACTLY AS SHOWN.

PREVENTATIVE MAINTENANCE CONT.

A clean vacuum filter (*) must be installed in the recovery tank at all times to protect the motor. (See below image 13.1)

Serious damage to vacuum motors will occur when vacuum filter is not installed. (See below image 13.2)

image 13.1

WITH CLEAN VACUUM FILTER

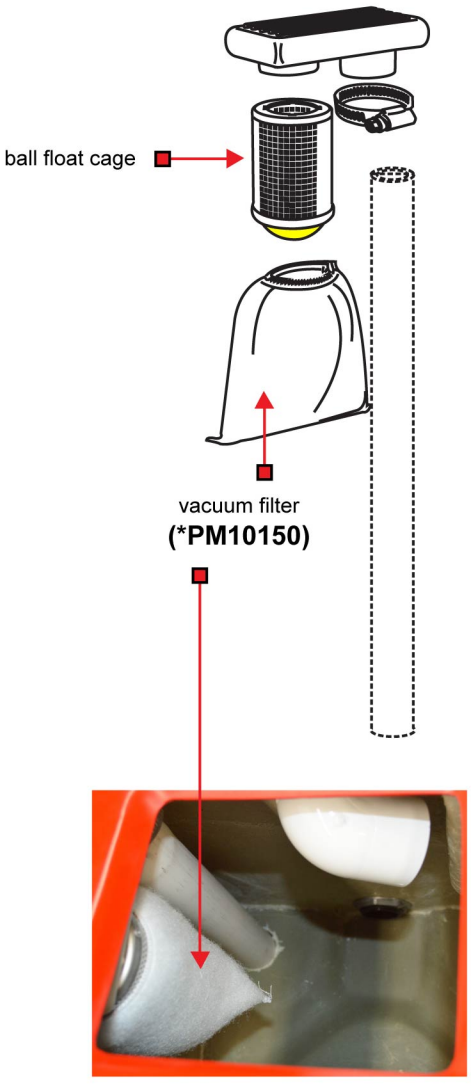

image 13.2

WITHOUT VACUUM FILTER

IMAGES AND ILLUSTRATIONS ARE FOR REFERENCE ONLY. ACTUAL PRODUCTS MAY NOT BE EXACTLY AS SHOWN.

HOW TO USE ATTACHMENT TOOL

BETTER TECHNIQUE WILL HELP WITH DRY TIME, CARPET LIFE, AND OVERALL COST.

1. To clean, Pull the tool over the carpet with solution control valve lever pressed. (image 14.2, 14.1)
   Press the lever only while pulling back on the wand. (image 14.3, 14.2) Pull the tool with the valve lever pressed to insure the best results.
2. Release the solution control valve lever (image 14.4, 14.1) and pass the tool over the dampened area once or twice by pulling or pushing the tool back and forth. Repeat the procedure if necessary.

   NOTE: The weight of the tool and the vacuum suction are sufficient to obtain idea results. Additional physical pressure is unnecessary.

   Continue cleaning until the recovery tank becomes full (or whenever the job is done).

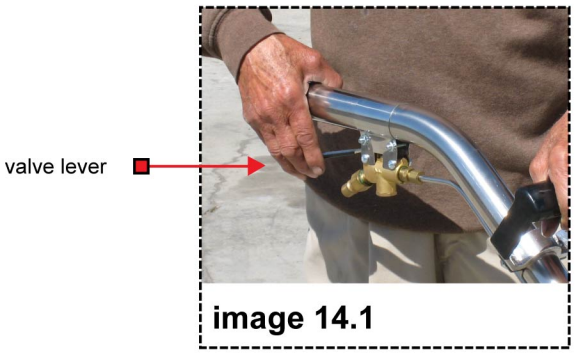

image 14.1

Press the lever to open the valve

image 14.3

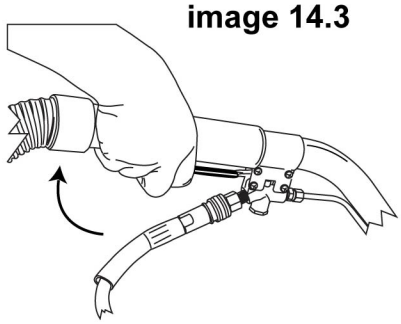

image 14.4

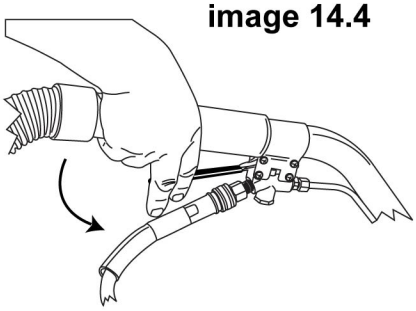

image 14.2

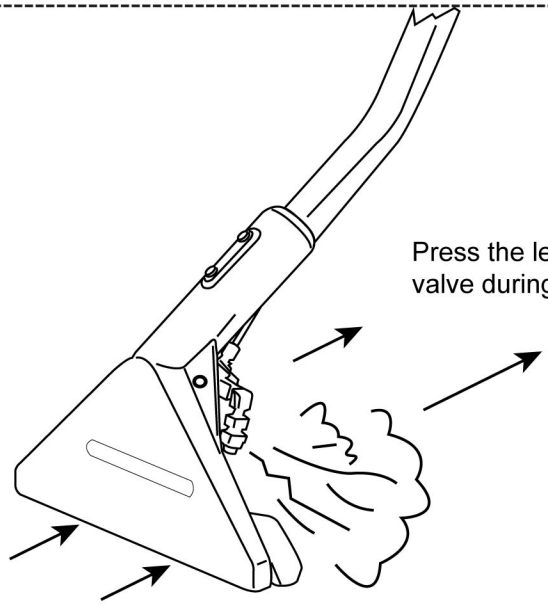

HOW TO BLEED

WITHOUT ELECTRIC INSTANT WATER HEATER:

1. Fill solution tank with clean water.
2. Connect desired tool and extractor with vacuum hose and solution hose.
3. Turn pump switch to “ON”.
4. Open trigger valve from your attachment tool (See image 15.1), and spray until all air is out from the solution system. (See image 15.2) It might take 2-4 minutes depending on the jet size from the attachment tool.

WITH ELECTRIC INSTANT WATER HEATER:

WARNING: DO NOT TURN ON THE HEATER until you have following steps.

1. Fill solution tank with clean water.
2. Connect desired tool and extractor with vacuum hose and solution hose.
3. Turn pump switch to “ON”.
4. Open trigger valve from your attachment tool (See image 15.1), and spray until all air is out from the solution system. (See image 15.2) It might take 2-4 minutes depending on the jet size from the attachment tool.
5. Turn heater switch on and wait approximatley 3-4 minutes to heat up. Now you are ready to use your extractor with IN-LINE heater.

DID YOU KNOW?

The quickest way to bleed air out is taking all the jets out and then following steps 1 through 4 before replacing the jets.

image 15.1 Press the lever to open the valve

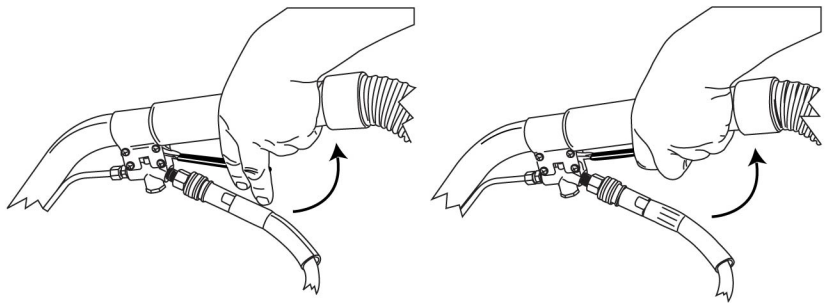

image 15.2

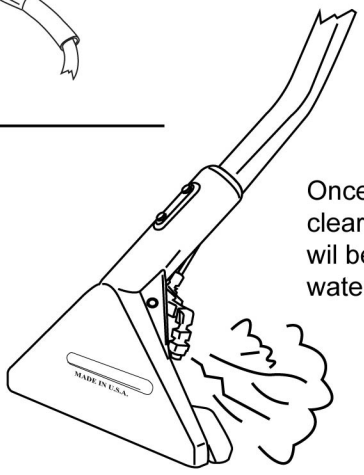

Once the line is clear of air you wil begin to see water

OPTIONS

CHEMICAL FEED & MIXING SYSTEM

1. **ADJUSTABLE CHEMICAL FEED SYSTEM** **(See image 16.2)**
   (Detail; see adjustable chemical feed system page)
2. **METERING TIPS PRESET CHEMICAL FEED SYSTEM** **(See image 16.3)**
   (Detail; see metering tips preset chemical feed system page)

1. ADJUSTABLE CHEMICAL FEED SYSTEM

image 16.1

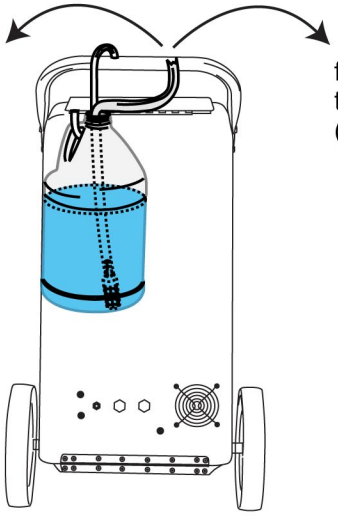

from chemical feed line to extractor quick connect (See below image 16.2)

from chemical feed line to extactor quick connect (See below image 16.3)

image shown Chemical bottle hand on the extractor

image 16.2

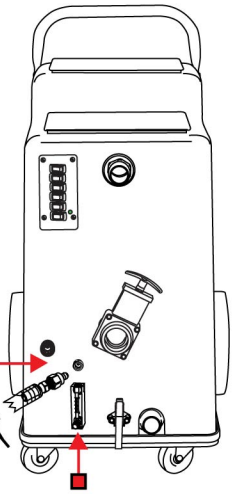

chemical feed & mixing quick connect

adjustable chemical feed flowmeter

2. METERING TIPS PRESET CHEMICAL FEED SYSTEM

image 16.3

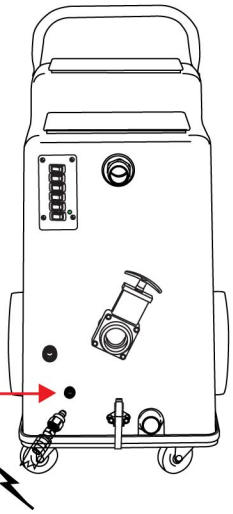

chemical feed & mixing quick connect

DEMA ENGINEERING COMPANY
100-15K METERING TIP KIT FOR ½" HOSE BARBS
10020 Big Bead Blvd., St. Louis, MO 63122
Phone: (314) 966-3533 Toll Free: (800) 325-3362 Fax: (314) 965-8319

PROPORTIONER MODELS 151,153, & 167 (4.5 GPM / 17.0 LP M)			
TIP	RATIO	oz/gal	mL/L
Tan	512:1	0.25	1.6
Orange	384:1	0.33	2.1
Turquoise	256:1	0.50	3.1
Pink	205:1	0.63	3.9
Light Blue*	171:1	0.75	4.7
Brown	128:1	1.00	6.2
Red	102:1	1.25	7.8
White	85:1	1.50	9.3
Green	73:1	1.75	10.9
Blue	64:1	2.00	12.4
Yellow	40:1	3.20	19.8
Black	32:1	4.00	24.8
Purple	20:1	6.40	39.7
Gray	12:1	10.00	62.2
None	10:1	12.00	74.4

SPRAY CLEAN INJECTORS MODELS 241CT & 244CT (3 GPM / 11.4 LPM)			
TIP COLOR	RATIO	oz/gal	mL/L
Tan	366:1	0.35	2.2
Orange	256:1	0.50	3.1
Turquoise	183:1	0.70	4.3
Pink	128:1	1.00	6.2
Light Blue*	102:1	1.25	7.8
Brown	92:1	1.40	8.7
Red	73:1	1.75	10.9
White	58:1	2.20	13.6
Green	51:1	2.50	15.5
Blue	41:1	3.10	19.2
Yellow	27:1	4.70	29.1
Black	22:1	5.90	36.6
Purple	15:1	8.50	52.7
Gray	13:1	9.75	60.5
None	12:1	11.10	68.8

Form S13191

metering tips preset chemical feed system will find inside the extractor

IMAGES AND ILLUSTRATIONS ARE FOR REFERENCE ONLY. ACTUAL PRODUCTS MAY NOT BE EXACTLY AS SHOWN.

1. ADJUSTABLE CHEMICAL FEED SYSTEM

NOTE: You may pre-spray your cleaning area with a pre-spray solution prior to extracting or you may use the CHEMICAL FEED AND MIXING SYSTEM to mix in the cleaning solution automatically with water while cleaning.

To use the ADJUSTABLE CHEMICAL FEED AND MIXING SYSTEM, have a bottle or bucket of cleaning solution ready. (See image 17.4). If you are using a cleaning chemical in powder form, mix it with water thoroughly, make sure it is fully dissolved. Any undissolved powder can clog up the flowmeter, spray jets, and other parts on the extractor damaging them in the process.

A. Place the bottle or pail of cleaning solution to the the side of the extractor. Put the end of CHEMICAL FEED LINE all the way to the bottom of the bottle or bucket of cleaning solution. (See image 17.4). If the CHEMICAL FEED LINE is not fully submerged in the solution, air can get into the system and it may disable it.

B. Turn pump switches “ON”.

C. Open the adjustable flowmeter fully by turning it counter clockwise. (See image 17.1 and 17.2)
If there is any air in the system, you will see air bubbles in the adjustable flowmeter and the ball inside will be bobbing up and down. (See image 17.2) Then, pull the trigger valve from wand or any attached tools to let the air out. (See the “How to Bleed” page)

D. Adjust the Adjustable flowmeter according to the chart. (See image 17.3) Mixture rate should be based on the condition of the carpet or upholstery you are cleaning. When setting the flowmeter, open the solution valve on the wand.

image 17.1

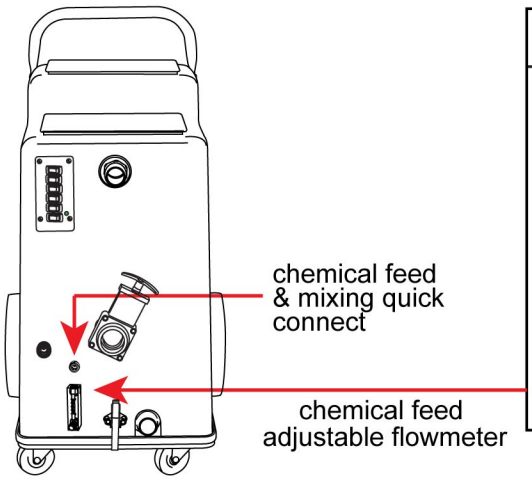

image 17.2

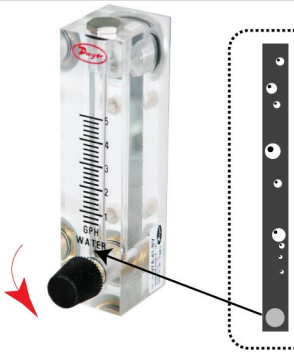

SIGNS OF AIRLOCK
- Bubbles
- The ball is bobbing up and down

Bubbles

The ball is bobbing up and down

image 17.3

SCALE	WATER:CHEMICAL
1	60:1
2	30:1
3	20:1
4	15:1
5	12:1

(EXAMPLE: MIXTURE RATE:
SCALE 1=60 GALLON OF WATER TO 1 GALLON OF CHEMICAL)

image 17.4

Submerge in the cleaning solution

Do not expose to air while operating

IMAGES AND ILLUSTRATIONS ARE FOR REFERENCE ONLY. ACTUAL PRODUCTS MAY NOT BE EXACTLY AS SHOWN.

2. METERING TIPS PRESET CHEMICAL FEED SYSTEM

ABOUT:
Same operation and setup as ADJUSTABLE CHEMICAL FEED SYSTEM, but preset chemical feed system do not use chemical feed adjustable flowmeter. (See images on “ADJUSTABLE CHEMICAL FEED SYSTEM” page)

The metering tips preset chemical feed rate is controlled by a metering tip (different size) screwed into the metering barb on the side of the unit. (see image 18.1, and the arrow)
The feed rates can be changed by using different size metering tip which is availabe with the kit.
To select a proper size metering tip for the desired dilution ratio refer to the chart. (See image 18.3)
Can be found metering system in between solution tank and the pump plumbing system.

TO USE:
Have a bottle or bucket of cleaning solution ready. If you are using a cleaning chemical in powder form, mix it with water thoroughly and make sure it is fully dissolved. Undissolved powder can clog up the spray jets and other parts on the unit damaging them in the process.

A. Place the bottle or bucket of cleaning solution to the side of the extractor. Put the end of CHEMICAL FEED LINE all the way to the bottom of the bottle or bucket of cleaning solution. (See image 18.2). If CHEMICAL FEED LINE is not fully submerged in the solution, air can get into the chemical feed and mixing system and it may disable the system. (See images on “CHEMICAL FEED AND MIXING SYSTEM PAGE)

B. Turn chemical feed switch on.

image 18.1

metering preset chemical feed system tips

image 18.2

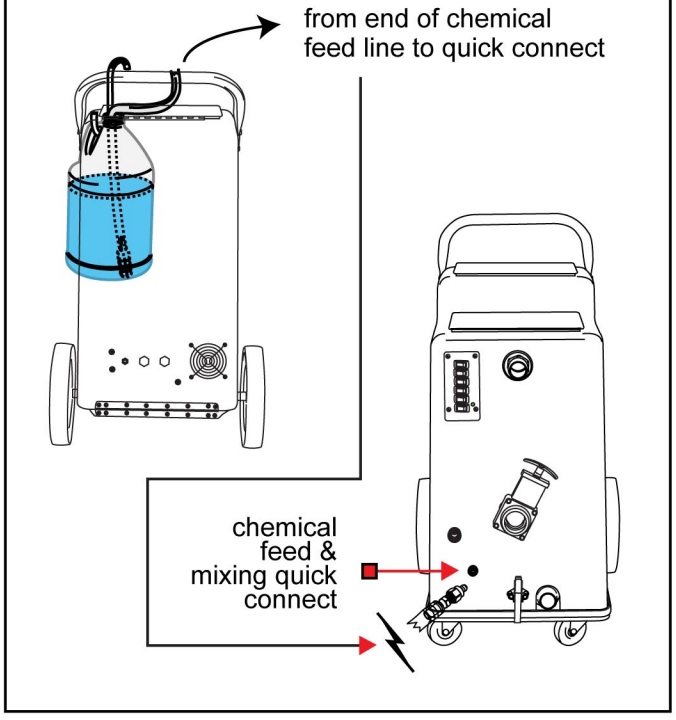

image 18.3

INJECTION RATES
1 GPM/3.8 LPM

TIP	RATIO	oz/gal.	mL/L
Tan	102:1	1.25	7.8
Orange	75:1	1.70	10.5
Turquoise	60:1	2.15	13.3
Pink	43:1	3.00	18.6
Light Blue*	33:1	3.90	24.2
Brown	28:1	4.55	28.2
Red	22:1	5.80	36.0
White	18:1	7.00	43.4
Green	16:1	7.90	49.0
Blue	13:1	9.80	60.8
Yellow	9:1	14.80	91.8
Black	6:1	20.15	124.9
Purple	5:1	27.80	172.4
Gray	4.1	31.60	195.9
None	3.6:1	35.00	217.0

IMAGES AND ILLUSTRATIONS ARE FOR REFERENCE ONLY. ACTUAL PRODUCTS MAY NOT BE EXACTLY AS SHOWN.

HEATERS

1. ELECTRIC INSTANT WATER HEATER (in line heater)

1. Fill solution tank with clean water.
2. Connect desired attachment tool.
3. Turn pump switch ON.
4. Bleed the line. (See image 19.2 and “How to Bleed the system” page.)
5. Turn heater switch “ON” and wait approximatley 3-4 minutes to heat up. Now it is ready to use

♦ The in line heater has a pre-set thermostat for 210 degrees fahrenheit.
♦ Keep solution tank clean and do not use any flammable products.
♦ Water level should always be over the level switch by a least two inches. (system with level switch)

image 19.1

image 19.2

EXAMPLE IMAGES

2. TANK HEATER (bottom mount)

1. Fill solution tank with clean water.
2. Connect desired attachment tool.
3. Bleed the line (See “How to bleed the system” page.)
4. Turn the heat switch on to heat up.

♥ Tank heater has a pre-set thermostat of 140 degrees fahrenheit.
♥ Keep solution tank clean and do not use any flammable products.
♥ Water level should always be over the level switch by at least two inches.

image 19.3

bottom mount heater

image 19.4

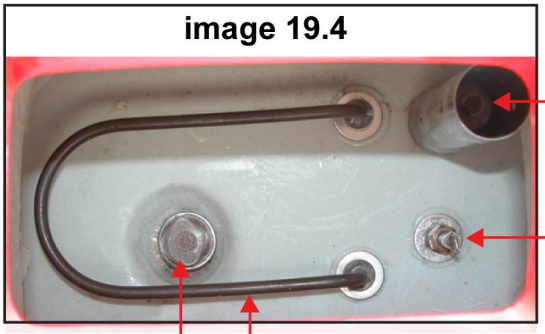

image 19.5

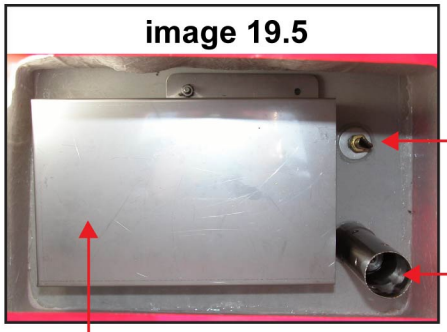

EXAMPLE IMAGES (left general image shows bottom mount heater and right image shows with optional cover)

IMAGES AND ILLUSTRATIONS ARE FOR REFERENCE ONLY. ACTUAL PRODUCTS MAY NOT BE EXACTLY AS SHOWN.

TROUBLE-SHOOTING

ELECTRICAL SYSTEM		
PROBLEM	**POSSIBLE CAUSE**	**HOW TO REPAIR**
No electrical power (Component or extractor not turning on)	1. Check the outlet & the plug 2. Damage cord 3. Circuit breaker off or fuse blown	1. Plug in properly 2. See authorized repair person 3. Flip circuit breaker on or replace fuse. Unplug other equipment using the same circuit. Make sure cords are plugged into proper amp circuits.
Switch is turned on, power is intermittent to all motors	1. Faulty electrical cable 2. Defective switch 3. Loose terminal or corroded connector	1. to 3.: See autohrized repair person
Electric shock	1. Equipment or electric cord not grounded	See authorized repair person
PUMP SYSTEM		
Pump motor stopped	1. Pressure build up cause by jet clogged. 2. Thermal overload (over heated) 3. Damaged motor or rectifier 4. Pump switch defective 5. Loose wire connection 6. Pump pressure switch defective 7. Faulty motor	1. Released pressure by opening up (press) the lever on the Wand. 2. Turn off the pump and heater switch and wait 20-30 minutes 3. to 7: See authorized repair person
Loss of pump presure with wand valve open and/or uneven or weak spray from the jet tips	1. Clogged or dirty spray tip 2. Accumulated dirt in solution line 3. Dirty or clogged filters 4. Pump check valve worn or dirty 5. Malfuction in the wand valve 6. Hose quick connect bad or clogged with foriegn object	1. Clean jets and screens 2. Flush system w/water 3. Clean 4. to 6: See authorized repair person

TROUBLE-SHOOTING

VACUUM SYSTEM

PROBLEM	POSSIBLE CAUSE	HOW TO REPAIR
Vacuum motor on with little or no vacuum or suction at wand/ upholstery tool	1. Lid is not properly closed 2. Drain hose/valve not connected/ closed 3. Hose or wand clogged 4. Accumulated dirt on the ball float cage and filter 5. Worn out lid gasket 6. Lint and dirt build-up on wand 7. Damaged vacuum hose 8. Loose or no vacuum hose connection inside the extractor 9. Foriegn object accumulated in vacuum fans	1. Close the lid 2. Connect hose or close optional drain valve 3. Clean hoses and wand 4. Clean or replace the filter 5. Replace the gasket 6. Clean the wand 7. Replace 8. See authorized repair person 9. See authorized repair person
Vacuum motors run intermittently		See authorized repair person

ETC...

PROBLEM	POSSIBLE CAUSE	HOW TO REPAIR
No water from the jet	1. Extractor not plugged in (or circuit breaker off) 2. Switch is not turned on (bad switch?) 3. Empty solution tank 4. The hose is not connected properly	1. Plug in working outlet 2. Turn the switch on. See authorized repair person for new switch 3. Fill the solution tank with water 4. Connect hose properly
Water or foam coming out from exhaust	1. Over foaming of water in reovery tank 2. Elbow fitting in recovery tank pointing wrong direction (i.e. pointed toward the ball-float cage) 3. No ball-float cage 4. Too much water in the recovery tank	1. Put defoamer in the recovery tank or put it in the end of vacuum hose wtih vacuum motor running 2. Point elbow away from ball-float cage 3. Install ball-flat 4. Drain the recovery tank

CAUTION:

1. DISCONNECT POWER CORDS FROM THE OUTLET BEFORE DOING ANY MAINTENANCE WORK.
2. WHEN ELECTRIC POWER IS ON PROTECT YOURSELF FROM ELECTRIC SHOCK & HEAT

TROUBLE-SHOOTING

	HEAT SYSTEM	
PROBLEM	**POSSIBLE CAUSE**	**HOW TO REPAIR**
Water not heating up	1. Air in the heater 2. Bad thermostat 3. Heating element burned out 4. Safety valve open	1. Bleed (See "How to bleed" page) 2. Replace 3. Replace 4. Check safety valve and close it

CAUTION:

1. DISCONNECT POWER CORDS FROM THE OUTLET BEFORE DOING ANY MAINTENANCE WORK.
2. WHEN ELECTRIC POWER IS ON PROTECT YOURSELF FROM ELECTRIC SHOCK & HEAT

WARNING: This product contains chemicals known to the State of California to cause cancer, birth defects or other reproductive harm.

ADVERTENCIA: Este product contiene substancios quilicas reconocidas par el estado de California como causantes de cancer, anomalias congenitas y otros danos reproductivos.

TMI
TIMBUCKTOO MFG., INC.

Manufacturer of commercial & environmental cleaning equipment

1633 WEST 134th. STREET GARDENA, CA 90249-2013
TEL: 310 323 1134 FAX: 310 323 8397
WWW.TIMBUCKTOOMFG.COM

© All rights reserved